102196

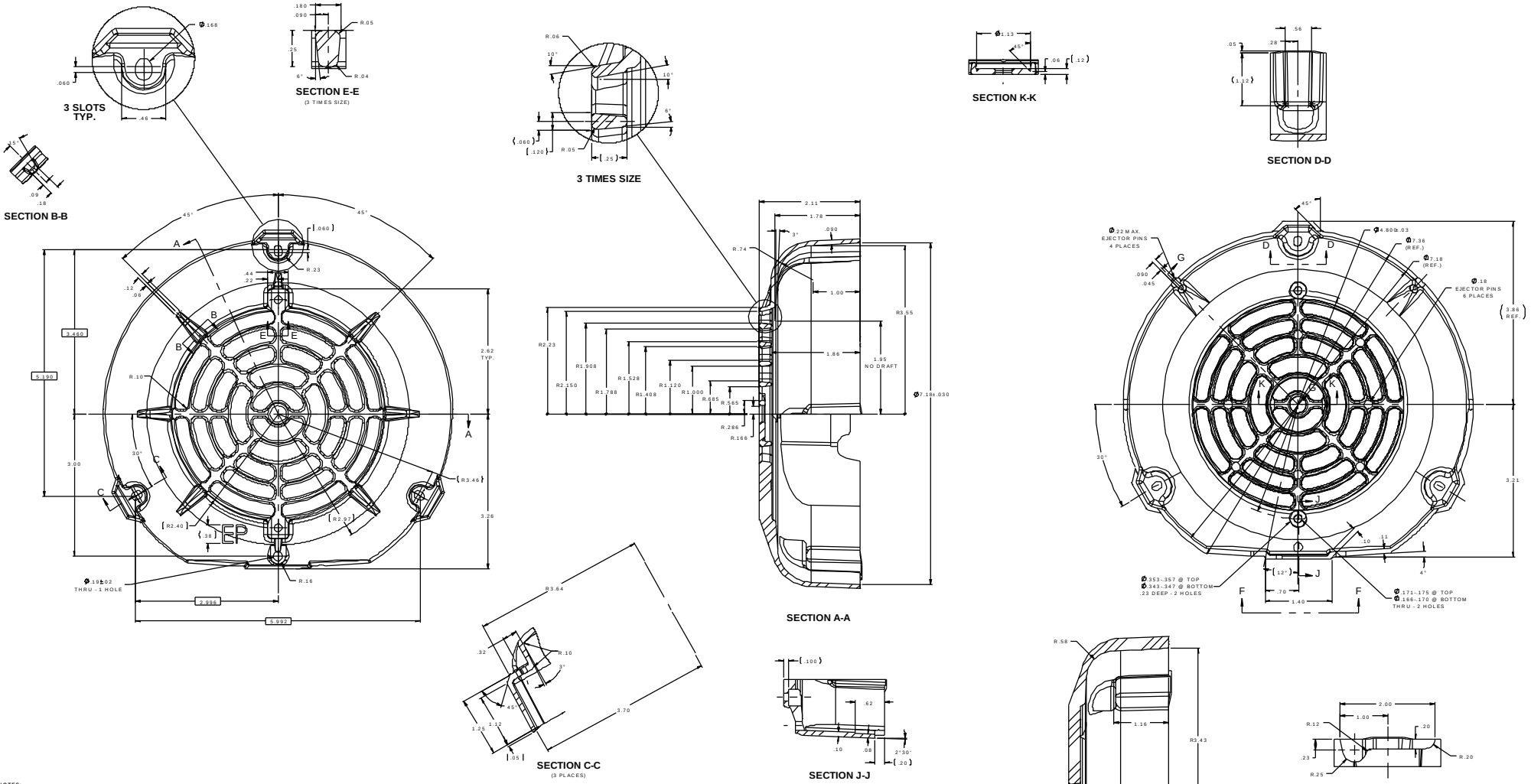

NOTES:
1-ALL FILLETS AND RADII TO BE R.08 UNLESS OTHERWISE SPECIFIED.
2-ALL DRAFT ANGLES TO BE 3 °0' UNLESS OTHERWISE SPECIFIED.
3-SINK MARKS MAY APPEAR AT THE FOUR EJECTOR PIN POSTS.
4-COVER SIDE (LEFT HAND VIEW) TEXTURE PER WISCONSIN ENGRAVING PLAQUE #1-U723548 .003" OR EQUIVALENT.
5-NO MATERIAL CHANGES OR SUBSTITUTIONS ALLOWED WITHOUT PRIOR APPROVAL BY MARATHON ELECTRIC'S ENGINEERING DEPT.
6-MATERIAL CERTIFICATION REQUIRED WITH EACH SHIPMENT.
7-DASH 6 WHITE FAN GUARDS MUST BE WRAPPED IN INDIVIDUAL POLY BAGS FOR PROTECTION.

TRIM REQUIREMENTS MAXIMUM ALLOWABLE FLASH
1-VENT OPENINGS .01 PER SIDE.
2-OUTSIDE DIAMETER .03 PER SIDE.
3-ALL OTHER TRIM AREAS NOT SPECIFIED ABOVE TO BE .02 PER SIDE.
4-EJECTOR PIN MARKS MAY BE FLUSH TO .03 BELOW CASTING SURFACE. FLASH REQUIREMENTS ARE PER NOTE #3 ABOVE.
5-EJECTOR PINS MUST BE IN LOCATION SHOWN TO ENABLE GUARD TO FIT MATING PART.

	DASH	MATERIAL SPEC.	COLOR	U.V. PROTECTION	E.P. INSERT
04-27-2011 / 01-24-2006	13	POLYPROPLENE HIMONT PRO-FAX 8523	ANSI 70 LT GRAY	U.V. STABILIZER	NO
	12	POLYPROPLENE HIMONT PRO-FAX 8523	GRAINGER FRAM DUTY GREEN	U.V. STABILIZER	NO
	11	POLYPROPLENE HIMONT PRO-FAX 8523	GRAINGER GREY	U.V. STABILIZER	NO
	10	POLYPROPLENE HIMONT PRO-FAX 8523	ANSI 33 GREY	U.V. STABILIZER	NO
	9	POLYPROPLENE HIMONT PRO-FAX 8523	LEESON BLUE	U.V. STABILIZER	NO
OBSOLETE USE -10	7	POLYPROPLENE HIMONT PRO-FAX 8523	GREEN	U.V. STABILIZER	NO
	6	POLYPROPLENE HIMONT PRO-FAX 8523	WHITE	U.V. STABILIZER	NO
	5	POLYPROPLENE HIMONT PRO-FAX 8523	BLUE	U.V. STABILIZER	NO
	4	POLYPROPLENE HIMONT PRO-FAX 8523	RED	U.V. STABILIZER	NO
	3	RTP199Z63279A OR RTP199X50505	BLACK	CARBON ADDED	YES
	2	POLYPROPLENE HIMONT PRO-FAX 8523	BLACK	2% MIN BY WEIGHT CARBON	NO
OBSOLETE USE -10	DASH	MATERIAL SPEC.	COLOR	U.V. PROTECTION	E.P. INSERT

NO	REVISION	BY & DATE
21	ADDED ITEM # 13	RST 10/15/2013
20	OBSOLETE -1 AND -8 USE -10 IS 10-0404	MJK 1/27/2010
19	REMOVED NOTE 2 FROM TRIM REQUIREMENTS. CN 40880	DRS 10-14-2008
18	CHG DASH 3 MATL SPEC FROM X0505 CN 40702	DRS 10-04-2008
17	ADDED DASH 10 CN 39033	DRS 10-17-2005
16	REDRAWN IN SOLIDWORKS	TA7

THIS DRAWING IN DESIGN AND DETAIL IS OUR PROPERTY AND MUST NOT BE USED EXCEPT IN CONNECTION WITH OUR WORK. ALL RIGHTS OF DESIGN AND INVENTION ARE RESERVED. THIS IS AN ELECTRONICALLY GENERATED DOCUMENT - DO NOT SCALE THIS PRINT

TOLERANCES UNLESS SPECIFIED: FRACT ±1/64; DEC .XX ±.02; .XXX ±.005; ANG ±7°30'

REGAL-BELOIT CORPORATION

TITLE: FAN GUARD
56-140 FR
MATL SEE TABLE
FINISH
NO FILE 102196

DRAWN	S.L. 10-04-1994
CHK	M.L. 10-04-1994
APPR	R.K. 10-04-1994
SCALE	5:1
REF	
FMF	
PROV	

SIZE D | DRAWING NO 102196 | REV 21

10/15/2013 9:14:18 AM - Converted by Connexus