K11A39U2, Aluminum Universal Terminal, 2 Hole, Two: 1/0 AWG (Str)-750 kcmil, 3/8" Stud, 1.38" Stud Hole Spacing, 2 Screws, Al/Cu Rated, Tin Plated.

By Burndy
Catalog # K11A39U2

Aluminum Universal Terminal, 2 Hole, Two: 1/0 AWG (Str)-750 kcmil, 3/8" Stud, 1.38" Stud Hole Spacing, 2 Screws, Al/Cu Rated, Tin Plated.

Features

- Constructed from high strength, extruded aluminum alloy
- Electro tin-plated to provide low contact resistance

Application

For Aluminum and Copper Conductors

General

Catalog Number	K11A39U2
Connector Type	Stacked
EU RoHS Indicator	No
Hex Key	3/8
Installation Torque Recommended in-lb	375 LBS/in
Material	Aluminum
Material - Hardware	Aluminum
Physical Attribute - Number of Holes	2
Physical Attribute - Screw Type	Allen
Plated	Y
Plating Type	Tin plated
Sub Brand	UNIVERSAL TERM
Temperature Rating	194
Type	Bolted Lugs & Terminals
UPC	781810370292
UPC 14 Digit GTIN	00781810370292

Dimensions

Dimension - Bolt Hole Size inch	0.38 in
Dimension - Bolt Size fraction	3/8
Dimension - D inch	2.31 in
Dimension - Height fraction	3 in
Dimension - Height inch	3.02 in
Dimension - Height mm	76.7 mm
Dimension - Hole Size inch	0.41 in
Dimension - Hole Size mm	10 mm
Dimension - L Length Overall mm	125 mm
Dimension - Length Overall inch	4.91 in
Dimension - N inch	0.38 in
Dimension - Pad Width inch	1.52 in
Dimension - Screw Size inch	13/16
Dimension - Stud Size fraction	3/8
Dimension - Stud Size inch	3/8 in
Dimension - Width fraction	1-69/100 in
Dimension - Width inch	1.52 in
Dimension - Width mm	43 mm

Electrical Ratings

Rating - Minimum Voltage	600

Conductor Related

Conductor - AL Str Size	1/0 AWG;2/0 AWG;3/0 AWG;4/0 AWG;250 kcmil;266 kcmil;300 kcmil;336 kcmil;350 kcmil;397 kcmil;400 kcmil;450 kcmil;477 kcmil;500 kcmil;550 kcmil;556 kcmil;600 kcmil;636 kcmil;650 kcmil;700 kcmil;715 kcmil;750 kcmil
Conductor - AL Str Size Range	1/0 AWG (Str)-750 kcmil
Conductor - Copper Solid Size	1/0 AWG;2/0 AWG;3/0 AWG;4/0 AWG
Conductor - Copper Solid Size Range	1/0 AWG-4/0 AWG
Conductor - Copper Str Size	1/0 ;2/0 AWG;3/0 AWG;4/0 AWG;250 kcmil;300 kcmil;350 kcmil;400 kcmil;450 kcmil;500 kcmil;550 kcmil;600 kcmil;700 kcmil;750 kcmil
Conductor - Copper Str Size Range	1/0 AWG (Str)-750 kcmil
Conductor Size	1/0 AWG-750 KCMIL

Conductor Type	• AL C Str-Size • CU C Str-Size • CU C Solid-Size
Number of Conductors	2

Certifications And Compliance

Buy America(n) Qualified	Buy American Act Compliant (All status valid till December 2024)
Certification - CSA Approved	Yes
Certification - UL Listed Direct Burial	No
Industry Standard(s)	UL 486A-486B
Standards - Industry Standards Met	UL 486A-486B
Standards - RoHS Compliance Status	NC
UL Listed	Yes

Logistics

Minimum Pack Quantity	1

Product Assets

3D Models - K11A39U2_MODEL-STEP
3D Models - K11A39U2_MODEL-PDF
3D Models - K11A39U2_MODEL-IGES
Catalogs - BURNDY Master Catalog - Section A - Mechanical
Catalogs - BURNDY Master Catalog - Full Line BURNDY Catalog
Customer Notices - Prop 65 Notice
Interactive Catalog - BURNDY Full-Line Digital Catalog
Product Cross Section Image(s) - BUR_K22AU_Lineart
Sales Drawings - se210997
Specifications - K11A39U2

©2025 Hubbell Incorporated. All rights reserved

DRAWING NO. SE210997

REV	DATE	DESCRIPTION	ECO	BY	C'H'K.
T	2023-09-19 04:00:00 EDT	UPDATED AS PER MARKUPS ---	230824032880	RA	YR

CATALOG NUMBER ◁5▷	FIG. NO.	CONDUCTOR RANGE AL or CU (AWG/KCMIL)	BOLT HOLE SIZE	DIMENSIONS C MAX.	D	E	H MAX.	K DIA.	L	N	T	RECOMMENDED TIGHTENING TORQUE: IN.LBS N.M ◁6▷
KA6U ◁1A◁2A◁2B	1	14 STR. - 6 STR.	1/4" [M6]	.50 [13]	.63 [16]	----	.51 [13]	.27 [7]	1.06 [27]	.25 [6]	.09 [2]	35 (4)
KA2U ◁1A◁2A◁2B	1	14 STR. - 2 STR.	1/4" [M6]	.51 [13]	.63 [16]	----	.56 [14]	.27 [7]	1.16 [29]	.31 [8]	.10 [3]	50 (6)
KA25U	1	14 STR. - 1/0 STR.	1/4" [M6]	.63 [16]	.81 [21]	----	.92 [23]	.27 [7]	1.50 [38]	.44 [11]	.19 [5]	50 (6)
KA26U	2	14 STR. - 2/0 STR.	1/4" [M6]	.64 [16]	.81 [21]	----	.80 [20]	.27 [7]	1.47 [37]	.45 [11]	.19 [5]	120 (14)
KA29U	2	#6 - 250 KCMIL Class B & C #6 - 4/0 Class G, H, I, K, & DLO	5/16" [M8]	1.02 [26]	.94 [24]	----	1.14 [29]	.33 [8]	2.00 [51]	.47 [12]	.25 [6]	275 (31)
KA29UGI2	2	6 STR. - 250 kcmil	3/8" [M10]	1.02 [26]	.94 [24]	----	1.14 [29]	.42 [11]	2.00 [51]	.47 [12]	.25 [6]	275 (31)
KA30U	2	#6 - 300 KCMIL Class B & C #6 - 250 KCMIL Class G, H, I, K, & DLO	5/16" [M8]	1.02 [26]	.94 [24]	----	1.14 [29]	.33 [8]	2.00 [51]	.45 [11]	.25 [6]	275 (31)
KA31U	2	#6 - 350 KCMIL Class B & C #6 - 300 KCMIL Class G, H, I, K, & DLO	3/8" [M10]	1.14 [29]	1.03 [26]	----	1.27 [32]	.42 [11]	2.25 [57]	.52 [13]	.25 [6]	275 (31)
KKA31U2N	3	6 STR. - 350 kcmil	1/2" [M12]	1.27 [32]	3.16 [80]	1.75 [44]	1.52 [39]	.56 [14]	5.50 [140]	.63 [16]	.38 [10]	275 (31)
KA34U	2	#4 - 500 KMCIL Class B & C #4 - 400 KMCIL Class G, H, I, K, & DLO	3/8" [M10]	1.52 [39]	1.50 [38]	----	1.58 [40]	.42 [11]	2.81 [71]	.88 [22]	.31 [8]	450 (51)
KA36U	2	#2 - 600 KCMIL Class B & C #2 - 500 KCMIL Class G, H, I, K, & DLO	3/8" [M10]	1.52 [39]	1.72 [44]	----	1.58 [40]	.42 [11]	3.19 [81]	.78 [20]	.44 [11]	550 (62)
KA36U2N	4	2 STR. - 600 kcmil	1/2" [M12]	1.52 [39]	3.22 [82]	1.75 [44]	1.57 [40]	.56 [14]	4.69 [119]	.63 [16]	.44 [11]	550 (62)
KA40U	2	300 - 800 KCMIL Class B & C 350 - 750 KCMIL Class G, H, I, K, & DLO	1/2" [M12]	1.77 [45]	1.69 [43]	----	1.95 [50]	.53 [13]	3.38 [86]	.88 [22]	.50 [13]	550 (62)
KA40U2N	4	300 - 800 KCMIL Class B & C 350 - 750 KCMIL Class G, H, I, K, & DLO	1/2" [M12]	1.77 [45]	3.03 [77]	1.75 [44]	1.95 [50]	.56 [14]	4.75 [121]	.63 [16]	.50 [13]	550 (62)
KA44U	2	500 - 1000 KCMIL Class B & C 350 - 750 KCMIL Class G, H, I, K, & DLO	5/8" [M16]	1.77 [45]	1.88 [48]	----	1.95 [50]	.66 [17]	3.50 [89]	.88 [22]	.50 [13]	550 (62)
KA44U2N	4	500 - 1000 KCMIL Class B & C 350 - 750 KCMIL Class G, H, I, K, & DLO	1/2" [M12]	1.77 [45]	3.03 [77]	1.75 [44]	1.95 [50]	.56 [14]	4.75 [121]	.63 [16]	.50 [13]	550 (62)
KK2A28U2N	5	6 STR. - 4/0 STR.	1/2" [M12]	1.64 [42]	3.03 [77]	1.75 [44]	1.20 [30]	.56 [14]	5.38 [137]	.63 [16]	.25 [6]	275 (31)
KKA36U2N	3	2 STR. - 600 kcmil	1/2" [M12]	1.39 [35]	3.25 [83]	1.75 [44]	1.52 [39]	.56 [14]	5.50 [140]	.63 [16]	.38 [10]	550 (62)
KK2A36U2N	5	2 STR. - 600 kcmil	1/2" [M12]	2.76 [70]	3.37 [86]	1.75 [44]	1.58 [40]	.56 [14]	5.62 [143]	.63 [16]	.38 [10]	375 (42)

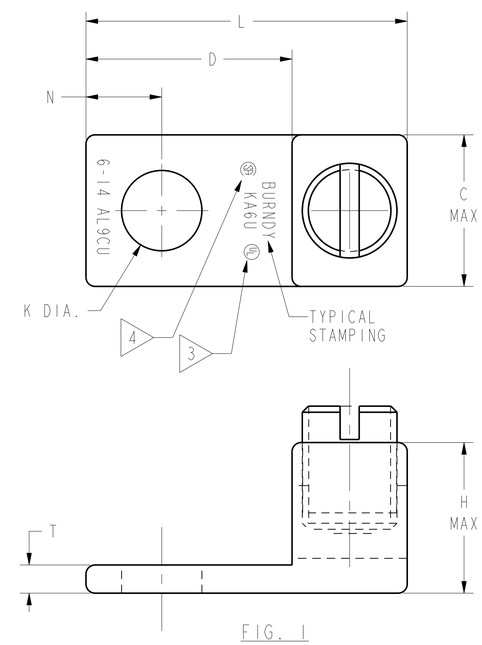

FIG. 1

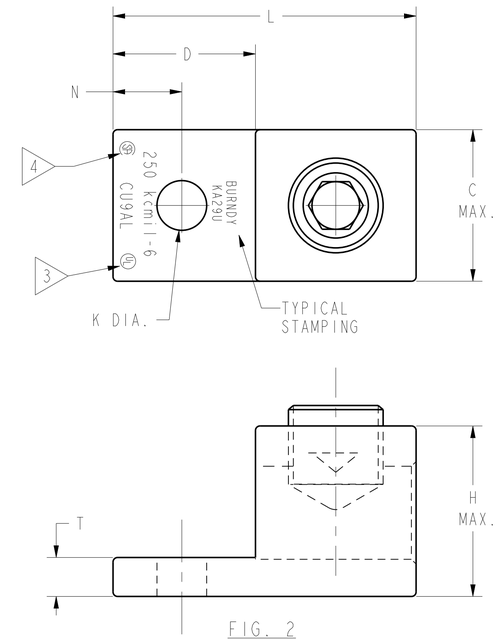

FIG. 2

NOTES:

1. MATERIAL-BODY: ALUMINUM
   SCREW: STEEL ◁1A
   ALUMINUM

2. FINISH-BODY: TIN PLATED
   NICKEL PLATED ◁2B
   SCREW: TIN PLATED
   ZINC PLATED ◁2A
   NICKEL PLATED ◁2B

▷3▷ CONNECTORS ARE UL LISTED TO UL486A- 486B FOR ALUMINUM AND COPPER CONDUCTORS AT 90°C. STAMP MAY READ CU9AL OR AL9CU TO INDICATE THIS LISTING.

▷4▷ CONNECTORS ARE CSA CERTIFIED TO C22.2, NO. 65 FOR INDICATED CONDUCTOR RANGE.

▷5▷ "N" INDICATES NEMA STANDARD STUD HOLES.

▷6▷ LISTED TORQUE VALUES ARE FOR MAXIMUM CONDUCTOR SIZES ACCOMMODATED.

7. DIMENSIONS IN BRACKETS [ ] ARE IN MILLIMETERS ROUNDED OFF TO THE NEAREST MILLIMETER, UNLESS OTHERWISE NOTED, AND ARE FOR REFERENCE ONLY.

8. PARTS WITH CATALOG NUMBERS ENDING IN "M" REQUIRE A METRIC, HEX. HEAD, SOCKET SET SCREW.

9. NOT RECOMMENDED FOR USE IN HIGHLY CORROSIVE ENVIRONMENT.

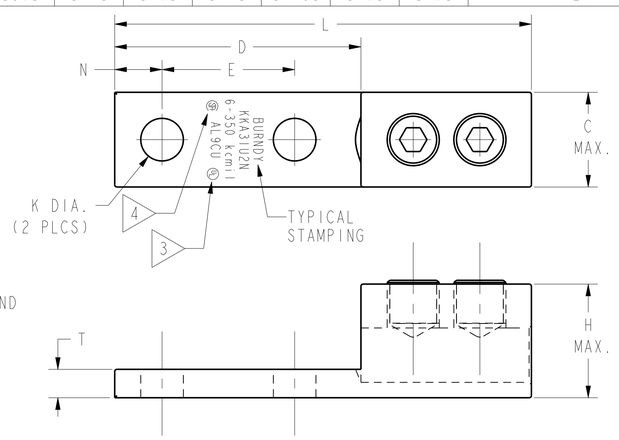

FIG. 3

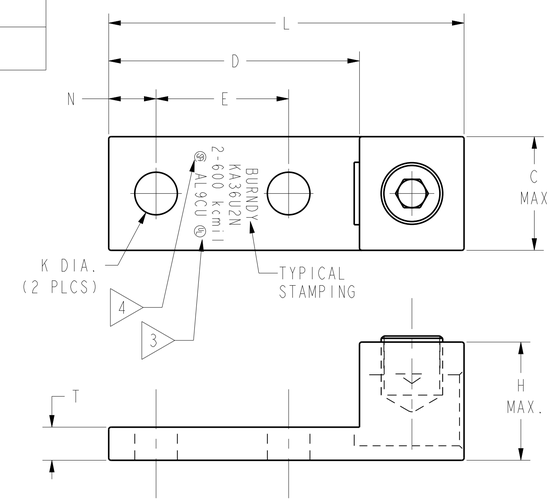

FIG. 4

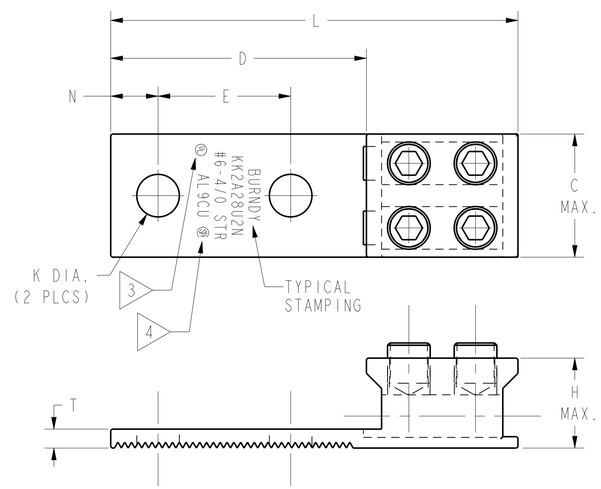

FIG. 5

CONNECTOR SIZE	TOLERANCES L
8C - 25	±.09
26 - 34	±.12
35 AND UP	±.15

TO ORDER BURNDY® PRODUCTS CALL

UNITED STATES:
1-800-346-4175 (LONDONDERRY, NH)

CANADA:
1-800-361-6975 (QUEBEC)
1-800-387-6487 (ALL OTHER PROVINCES)

FOR PRODUCT INFO: http://www.burndy.com

UNIVERSAL TERMINAL

ITEM NO:	392018	
CAT. NO:	KA-U, KA-UM, KKA-U (TABLE)	
DRAWN BY:	P. LAPONIUS	04/10/97
CHECKER:	J. MICHAUD	04/21/97
DSN APPVL:	K. MELLO	04/30/97
MFG APPVL:	--	--
QA APPVL:	D. VARIO	05/02/97
MKT APPVL:	P. WERTHMAN	05/01/97
PROD FAM:	CM&R_Mechanical	
PROJECT #:	--	
DOCUMENT TYPE:	Sales	
REL LEVEL:	Released	

SIZE: D

DRAWING NO: SE210997

REV: T

SCALE: 5:1

SHEET 1 OF 5

REV: CREO 08/10/21

DRAWING NO. SE210997

REV	DATE	DESCRIPTION	ECO	BY	C'H'K.
T	2023-09-19 04:00:00 EDT	UPDATED AS PER MARKUPS ---	230824032880	RA	YR

CATALOG NUMBER (5)	FIG. NO.	CONDUCTOR RANGE AL or CU (AWG/KCMIL)	BOLT HOLE SIZE.	DIMENSIONS C MAX.	D	E	H MAX.	K DIA	L	N	T	B	RECOMMENDED TIGHTENING TORQUE: IN.LBS N.M (6)
K2A25U	1	TWO: 14 STR. - 1/0 STR.	1/4" [M6]	1.15 [29]	.81 [21]	----	.79 [20]	.27 [7]	1.47 [37]	.44 [11]	.19 [5]	----	50 (6)
K2A26U	1	TWO: 14 STR. - 2/0 STR.	1/4" [M6]	1.27 [32]	.81 [21]	----	.80 [20]	.27 [7]	1.47 [37]	.44 [11]	.19 [5]	----	120 (14)
K2A29U	2	TWO: 6 STR. - 250 kcmil	3/8" [M10]	1.66 [42]	1.50 [38]	----	1.20 [30]	.40 [10]	2.56 [65]	.50 [13]	.25 [6]	1.51	275 (31)
K2A31U	2	TWO: #6 - 350 KCMIL Class B & C #6 - 300 KCMIL Class G, H, I, K, & DLO	1/2" [M12]	1.94 [49]	1.69 [43]	----	1.26 [32]	.56 [14]	2.88 [73]	.88 [22]	.25 [6]	----	275 (31)
K2A31U2N	3	TWO: #6 - 350 KCMIL Class B & C #6 - 300 KCMIL Class G, H, I, K, & DLO	1/2" [M12]	2.31 [59]	3.00 [76]	1.75 [44]	1.39 [35]	.56 [14]	4.50 [114]	.63 [16]	.31 [8]	----	275 (31)
K2A36U	2	TWO: #2 - 600 KCMIL Class B & C #2 - 500 KCMIL Class G, H, I, K, & DLO	1/2" [M12]	2.42 [61]	1.75 [44]	----	1.58 [40]	.53 [13]	3.20 [81]	.63 [16]	.44 [11]	2.02	375 (42)
K2A36U2N	3	TWO: #2 - 600 KCMIL Class B & C #2 - 500 KCMIL Class G, H, I, K, & DLO	1/2" [M12]	2.42 [61]	3.22 [82]	1.75 [44]	1.39 [35]	.56 [14]	4.69 [119]	.63 [16]	.44 [11]	----	375 (42)
K2A40U	1	TWO: 300 KCMIL - 800 KCMIL Class B & C 300 KMCIL - 750 KCMIL Class G, H, I, K, & DLO	5/8" [M16]	3.20 [81]	1.66 [42]	----	1.95 [50]	.66 [17]	3.38 [86]	.85 [22]	.50 [13]	----	550 (62)
K2A40U2N	3	TWO: 300 KCMIL - 800 KCMIL Class B & C 300 KMCIL - 750 KCMIL Class G, H, I, K, & DLO	1/2" [M12]	3.20 [81]	3.03 [77]	1.75 [44]	1.95 [50]	.56 [14]	4.75 [121]	.63 [16]	.50 [13]	----	550 (62)
K2A44U	1	TWO: 500 KCMIL - 1000 KCMIL Class B & C 500 KMCIL - 750 KCMIL Class G, H, I, K, & DLO	5/8" [M16]	3.52 [89]	1.66 [42]	----	1.95 [50]	.66 [17]	3.50 [89]	.88 [22]	.50 [13]	----	550 (62)
K2A44U2N	3	TWO: 500 KCMIL - 1000 KCMIL Class B & C 500 KMCIL - 750 KCMIL Class G, H, I, K, & DLO	1/2" [M12]	3.21 [82]	3.03 [77]	1.75 [44]	1.95 [50]	.56 [14]	4.75 [121]	.63 [16]	.50 [13]	----	550 (62)

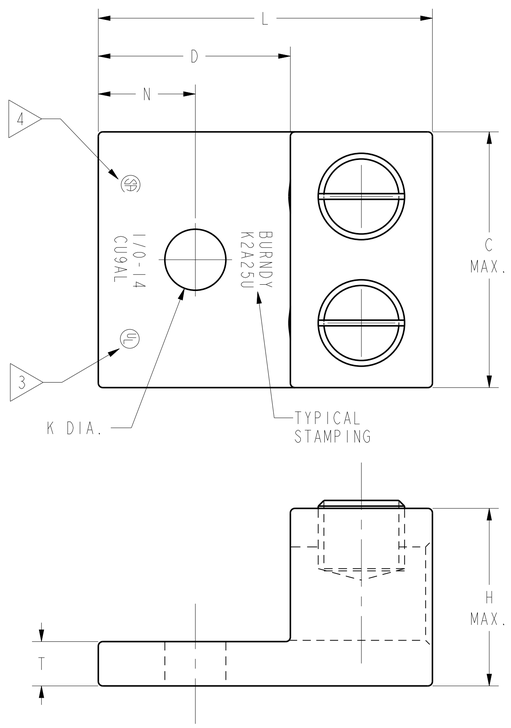

FIG. 1

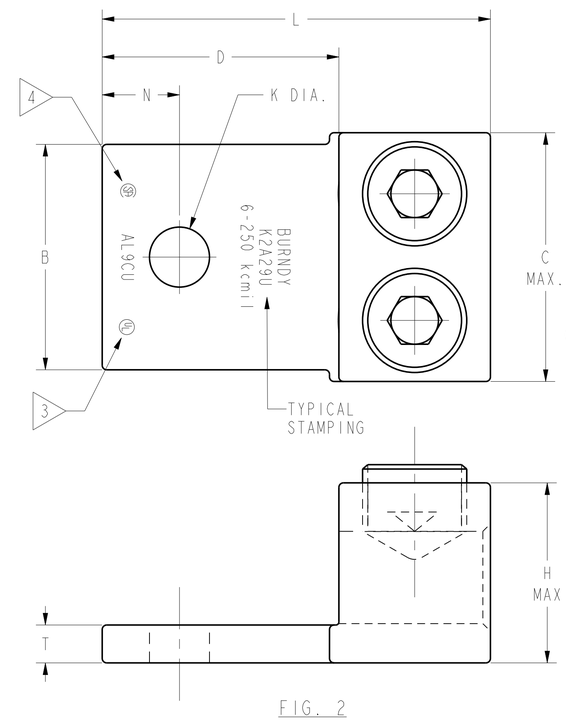

FIG. 2

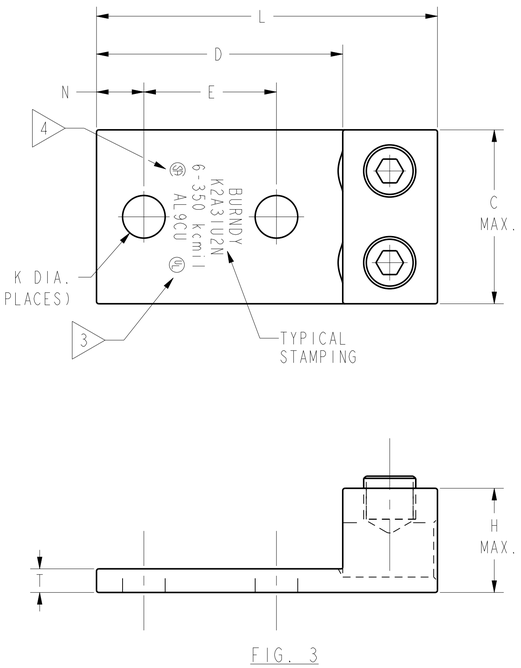

FIG. 3

NOTES:

1. MATERIAL-BODY: ALUMINUM
   SCREW: ALUMINUM

2. FINISH-BODY: TIN PLATED
   SCREW: TIN PLATED

3. CONNECTORS ARE UL LISTED TO UL486A- 486B FOR ALUMINUM AND COPPER CONDUCTORS AT 90°C. STAMP MAY READ CU9AL OR AL9CU TO INDICATE THIS LISTING.

4. CONNECTORS ARE CSA CERTIFIED TO C22.2, NO. 65 FOR INDICATED CONDUCTOR RANGE.

5. "N" INDICATES NEMA STANDARD STUD HOLES.

6. LISTED TORQUE VALUES ARE FOR MAXIMUM CONDUCTOR SIZES ACCOMMODATED.CONSULT UL486 TABLES 7-4, 7-5, & 7-6 FOR SMALLER CONDUCTOR SIZES.

7. DIMENSIONS IN BRACKETS [ ] ARE IN MILLIMETERS ROUNDED OFF TO THE NEAREST MILLIMETER, UNLESS OTHERWISE NOTED, AND ARE FOR REFERENCE ONLY.

8. NOT RECOMMENDED FOR USE IN HIGHLY CORROSIVE ENVIRONMENT.

CONNECTOR SIZE	TOLERANCES L
8C - 25	±.09
26 - 34	±.12
35 AND UP	±.15

TO ORDER BURNDY® PRODUCTS CALL

UNITED STATES:
1-800-346-4175 (LONDONDERRY, NH)

CANADA:
1-800-361-6975 (QUEBEC)
1-800-387-6487 (ALL OTHER PROVINCES)

FOR PRODUCT INFO: http://www.burndy.com

UNIVERSAL TERMINAL

ITEM NO:	N/A	
CAT. NO:	KA2-U (TABLE)	
DRAWN BY:	P. LAPONIUS	04/10/97
CHECKER:	J. MICHAUD	04/21/97
DSN APPVL:	K. MELLO	04/30/97
MFG APPVL:	--	--
QA APPVL:	D. VARIO	05/02/97
MKT APPVL:	P. WERTHMAN	05/01/97
PROD FAM:	CM&R_Mechanical	
PROJECT #:	--	
DOCUMENT TYPE:	Sales	
REL LEVEL:	Released	

SIZE: D

DRAWING NO: SE210997

REV: T

SCALE: 1:1

SHEET 2 OF 5

REV: CREO 08/10/21

DRAWING NO. SE210997

REV	DATE	DESCRIPTION	ECO	BY	C'H'K.
T	2023-09-19 04:00:00 EDT	UPDATED AS PER MARKUPS ---	230824032880	RA	YR

CATALOG NUMBER	FIG. NO.	CONDUCTOR RANGE ALUMINUM OR COPPER	BOLT HOLE SIZE	DIMENSIONS C MAX.	D	E	F	H MAX.	K DIA.	L	N	T	RECOMMENDED TIGHTENING TORQUE: IN.LBS N.M
K3A2U2	1	THREE: 14 STR. - 2 STR.	5/16" [M8]	1.64 [42]	1.63 [41]	.88 [22]	----	.65 [17]	.34 [9]	2.19 [56]	.34 [9]	.19 [5]	50 (6)
K3A2U4	2	THREE: 14 STR. - 2 STR.	11/32" ---	1.64 [42]	1.63 [41]	.88 [22]	.88 [22]	.65 [17]	.34 [9]	2.19 [56]	.34 [9]	.19 [5]	50 (6)
K3A25U2	1	THREE: 14 STR. - 1/0 STR.	7/16" ---	2.02 [51]	2.09 [53]	1.00 [25]	----	.89 [23]	.45 [11]	2.91 [74]	.34 [9]	.25 [6]	50 (6)
K3A25U4	2	THREE: 14 STR. - 1/0 STR.	7/16" ---	2.02 [51]	2.09 [53]	1.00 [25]	1.00 [25]	.89 [23]	.45 [11]	2.91 [74]	.34 [9]	.25 [6]	50 (6)
K3A26U2N	1	THREE: 14 STR. - 2/0 STR.	9/16" [14]	1.97 [50]	3.06 [78]	1.75 [44]	----	.80 [20]	.56 [14]	3.75 [95]	.63 [16]	.19 [5]	50 (6)
K3A27U2N	1	THREE: 6 STR. - 3/0 STR.	9/16" [14]	2.83 [72]	3.00 [76]	1.75 [44]	----	1.14 [29]	.56 [14]	3.88 [99]	.63 [16]	.31 [8]	120 (14)
K3A27U4TC38	2	THREE: 6 STR. - 3/0 STR.	9/16" [14]	2.83 [72]	3.00 [76]	1.00 [25]	1.00 [25]	1.20 [30]	.44 [11]	4.25 [108]	.34 [9]	.31 [8]	120 (14)
K3A27U4N	2	THREE: 6 STR. - 3/0 STR.	9/16" [14]	2.83 [72]	3.00 [76]	1.75 [44]	1.75 [44]	1.20 [30]	.56 [14]	4.25 [108]	.63 [16]	.31 [8]	120 (14)
K3A29U2N	1	THREE: 6 STR. - 250 kcmil	9/16" [14]	3.01 [76]	3.16 [80]	1.75 [44]	----	1.20 [30]	.56 [14]	4.25 [108]	.63 [16]	.31 [8]	275 (31)
K3A29U4N	2	THREE: 6 STR. - 250 kcmil	9/16" [14]	3.02 [77]	3.00 [76]	1.75 [44]	1.75 [44]	1.20 [30]	.56 [14]	4.25 [108]	.63 [16]	.31 [8]	275 (31)
K3A31U2N	1	THREE: 6 STR. - 350 kcmil	9/16" [14]	3.52 [35]	3.16 [80]	1.75 [44]	----	1.39 [35]	.56 [14]	4.50 [114]	.63 [16]	.31 [8]	275 (31)
K3A31U4N	2	THREE: 6 STR. - 350 kcmil	9/16" [14]	3.52 [89]	3.00 [76]	1.75 [44]	1.75 [44]	1.39 [35]	.56 [14]	4.50 [114]	.63 [16]	.31 [8]	275 (31)
K3A36U2N	1	THREE: 2 STR. - 600 kcmil	9/16" [14]	3.64 [92]	3.22 [82]	1.75 [44]	----	1.58 [40]	.56 [14]	4.69 [119]	.63 [16]	.44 [11]	550 (62)
K3A36U4N	2	THREE: 2 STR. - 600 kcmil	9/16" [14]	3.64 [92]	3.22 [82]	1.75 [44]	1.75 [44]	1.58 [40]	.56 [14]	4.69 [119]	.63 [16]	.44 [11]	550 (62)
KK3A36U2N	3	THREE: 2 STR. - 600 kcmil	9/16" [14]	4.22 [107]	3.00 [76]	1.75 [44]	----	1.52 [39]	.56 [14]	5.50 [140]	.63 [16]	.38 [10]	550 (62)
KK3A36U4N	4	THREE: 2 STR. - 600 kcmil	9/16" [14]	4.22 [107]	3.00 [76]	1.75 [44]	1.75 [44]	1.52 [39]	.56 [14]	5.50 [140]	.63 [16]	.38 [10]	550 (62)
K3A40U2N	1	THREE: 300 - 800 kcmil	9/16" [14]	4.83 [123]	3.03 [77]	1.75 [44]	----	1.95 [50]	.56 [14]	4.75 [121]	.63 [16]	.50 [13]	550 (62)
K3A40U4N	2	THREE: 300 - 800 kcmil	9/16" [14]	4.83 [123]	3.03 [77]	1.75 [44]	1.75 [44]	1.95 [50]	.56 [14]	4.75 [121]	.63 [16]	.50 [13]	550 (62)
KK3A40U2N	3	THREE: 300 - 800 kcmil	9/16" [14]	4.28 [109]	3.34 [85]	1.75 [44]	----	1.89 [48]	.56 [14]	6.19 [157]	.63 [16]	.56 [14]	550 (62)
KK3A40U4N	4	THREE: 300 - 800 kcmil	9/16" [14]	5.34 [136]	3.34 [85]	1.75 [44]	1.75 [44]	1.89 [48]	.56 [14]	6.19 [157]	.63 [16]	.56 [14]	550 (62)
KK3A44U2N	3	THREE: 500 - 1000 kcmil	9/16" [14]	4.79 [122]	3.34 [85]	1.75 [44]	----	1.90 [48]	.56 [14]	6.19 [157]	.63 [16]	.56 [14]	550 (62)
KK3A44U4N	4	THREE: 500 - 1000 kcmil	9/16" [14]	4.77 [121]	3.34 [85]	1.75 [44]	1.75 [44]	1.90 [48]	.56 [14]	6.19 [157]	.63 [16]	.56 [14]	550 (62)

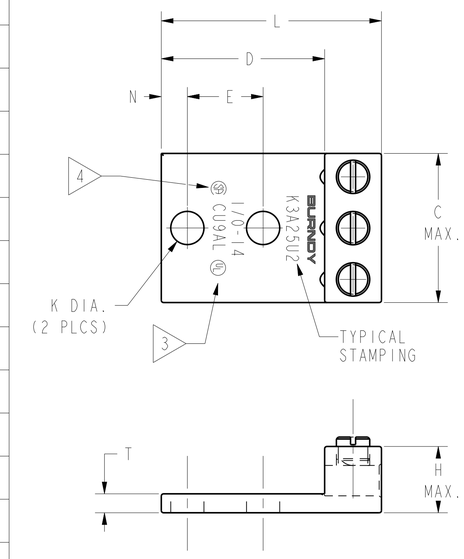

FIG. 1

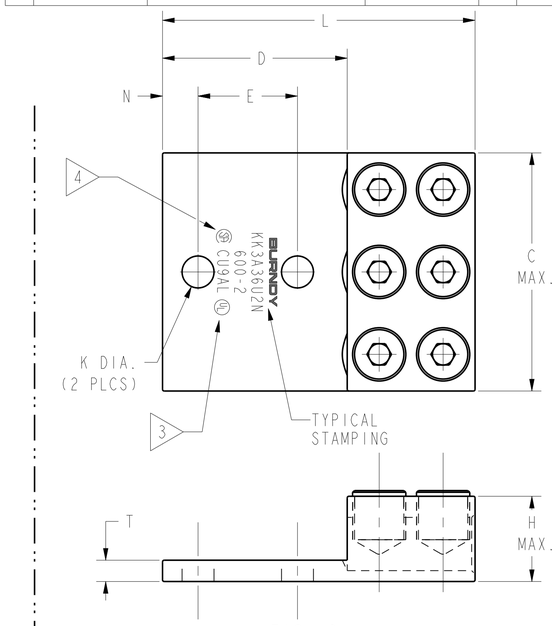

FIG. 3

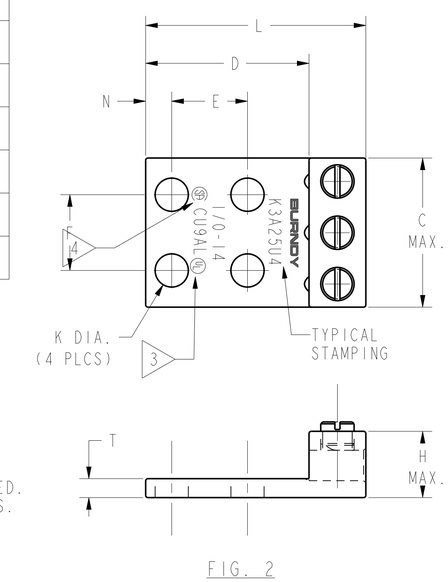

FIG. 2

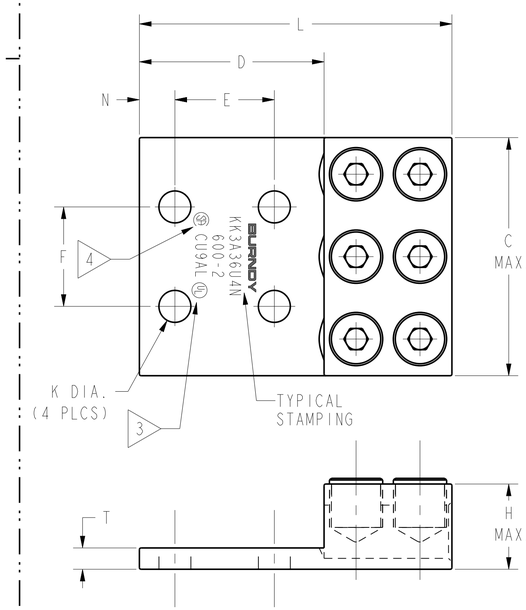

FIG. 4

NOTES:

1. MATERIAL-BODY: ALUMINUM
   SCREW: ALUMINUM
2. FINISH-BODY: TIN PLATED
   SCREW: TIN PLATED
3. CONNECTORS ARE UL LISTED TO UL486A- 486B FOR ALUMINUM AND COPPER CONDUCTORS AT 90°C. STAMP MAY READ CU9AL OR AL9CU TO INDICATE THIS LISTING.
4. CONNECTORS ARE CSA CERTIFIED TO C22.2, NO. 65 FOR INDICATED CONDUCTOR RANGE.
5. "N" INDICATES NEMA STANDARD STUD HOLES.
6. LISTED TORQUE VALUES ARE FOR MAXIMUM CONDUCTOR SIZES ACCOMMODATED. CONSULT UL486 TABLES 7-4, 7-5, & 7-6 FOR SMALLER CONDUCTOR SIZES.
7. SLOTTED SCREW.
8. DIMENSIONS IN BRACKETS [ ] ARE IN MILLIMETERS ROUNDED OFF TO THE NEAREST MILLIMETER, UNLESS OTHERWISE NOTED, AND ARE FOR REFERENCE ONLY.
9. NOT RECOMMENDED FOR USE IN HIGHLY CORROSIVE ENVIRONMENT.

CONNECTOR SIZE	TOLERANCES L
8C - 25	±.09
26 - 34	±.12
35 AND UP	±.15

TO ORDER BURNDY® PRODUCTS CALL
UNITED STATES: 1-800-346-4175 (LONDONDERRY, NH)
CANADA: 1-800-361-6975 (QUEBEC) 1-800-387-6487 (ALL OTHER PROVINCES)
FOR PRODUCT INFO: http://www.burndy.com

UNIVERSAL TERMINAL

ITEM NO:	N/A	
CAT. NO:	K3A-U (SEE TABLE)	
DRAWN BY:	P. LAPONIUS	04/10/97
CHECKER:	J. MICHAUD	04/21/97
DSN APPVL:	K. MELLO	04/30/97
MFG APPVL:	--	--
QA APPVL:	D. VARIO	05/02/97
MKT APPVL:	P. WERTHMAN	05/01/97
PROD FAM:	CM&R_Mechanical	
PROJECT #:	--	
DOCUMENT TYPE:	Sales	
REL LEVEL:	Released	

HUBBELL® BURNDY®

SCALE: 1:1

DRAWING NO	REV
SE210997	T
SHEET 3 OF 5	

SIZE: D

REV: CREQ 08/10/21

DRAWING NO. SE210997

REV	DATE	DESCRIPTION	ECO	BY	C'H'K.
T	2023-09-19 04:00:00 EDT	UPDATED AS PER MARKUPS ---	230824032880	RA	YR

CATALOG NUMBER ▷5	FIG. NO.	CONDUCTOR RANGE ALUMINUM OR COPPER	BOLT HOLE SIZE	DIMENSIONS C MAX.	D	E	F	H MAX.	K DIA	L	N	T	RECOMMENDED TIGHTENING TORQUE: IN.LBS N.M ▷6
K4A29U4N	1	FOUR: 6 STR. - 250 kcmil	9/16" [M14]	4.06 [103]	3.16 [80]	1.75 [44]	1.75 [44]	1.21 [31]	.56 [14]	4.25 [108]	.63 [16]	.31 [8]	275 (31)
K4A31U4N	1	FOUR: 6 STR. - 350 kcmil	9/16" [M14]	4.73 [120]	3.00 [76]	1.75 [44]	1.75 [44]	1.39 [35]	.56 [14]	4.50 [114]	.63 [16]	.31 [8]	275 (31)
KK4A36U4N	2	FOUR: 2 STR. - 600 kcmil	9/16" [M14]	5.04 [128]	3.34 [85]	1.75 [44]	1.75 [44]	1.51 [38]	.56 [14]	5.63 [143]	.63 [16]	.44 [11]	550 (62)
KK4A40U4N	2	FOUR: 300 - 800 kcmil	9/16" [M14]	6.04 [153]	3.41 [87]	1.75 [44]	1.75 [44]	1.89 [48]	.56 [14]	6.19 [157]	.63 [16]	.56 [14]	550 (62)

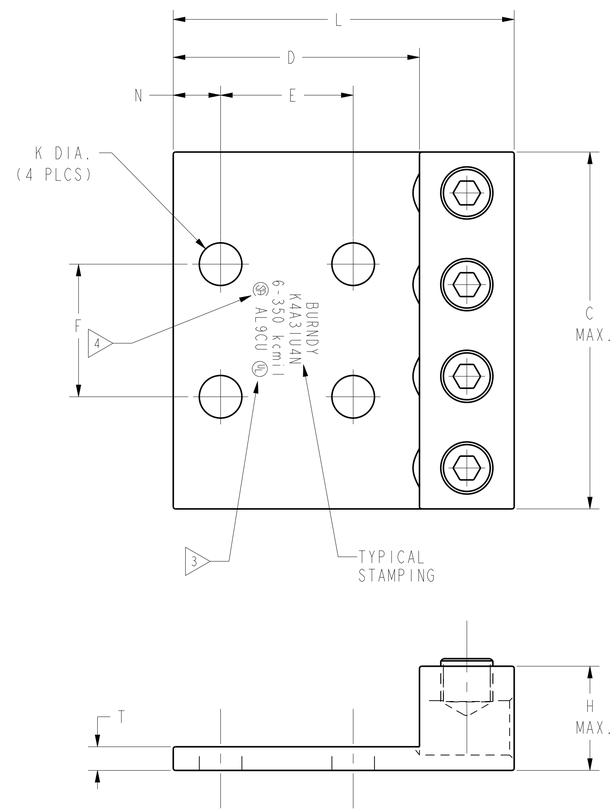

FIG. 1

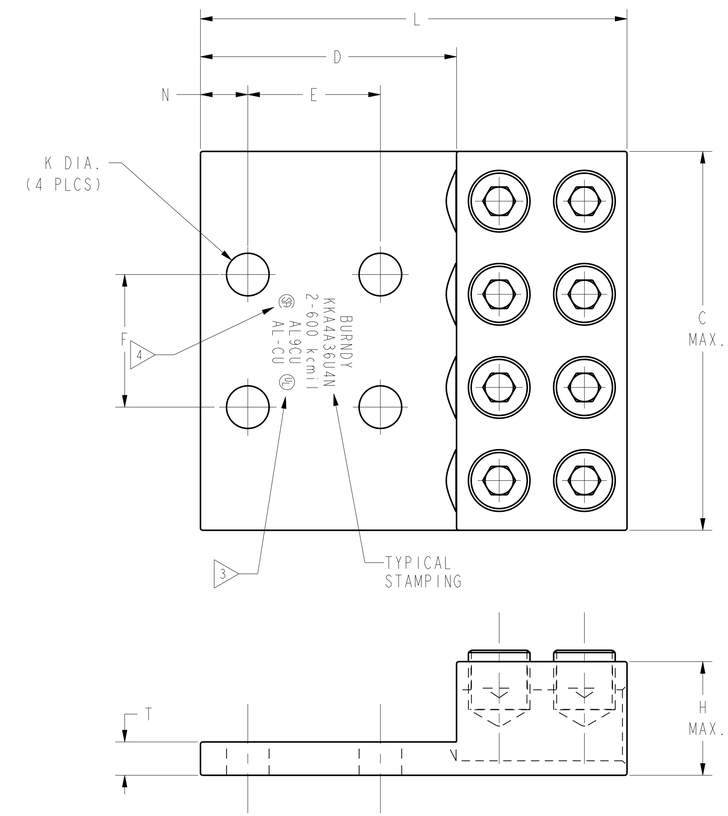

FIG. 2

NOTES:

1. MATERIAL-BODY: ALUMINUM
   SCREW: ALUMINUM

2. FINISH-BODY: TIN PLATED
   SCREW: TIN PLATED

3. CONNECTORS ARE UL LISTED TO UL486A- 486B FOR ALUMINUM AND COPPER CONDUCTORS AT 90°C. STAMP MAY READ CU9AL OR AL9CU TO INDICATE THIS LISTING.

4. CONNECTORS ARE CSA CERTIFIED TO C22.2, NO. 65 FOR INDICATED CONDUCTOR RANGE.

5. "N" INDICATES NEMA STANDARD STUD HOLES.

6. LISTED TORQUE VALUES ARE FOR MAXIMUM CONDUCTOR SIZES ACCOMMODATED.CONSULT UL486 TABLES 7-4, 7-5, & 7-6 FOR SMALLER CONDUCTOR SIZES.

7. DIMENSIONS IN BRACKETS [ ] ARE IN MILLIMETERS ROUNDED OFF TO THE NEAREST MILLIMETER, UNLESS OTHERWISE NOTED, AND ARE FOR REFERENCE ONLY.

8. NOT RECOMMENDED FOR USE IN HIGHLY CORROSIVE ENVIRONMENT.

CONNECTOR SIZE	TOLERANCES L
8C - 25	±.09
26 - 34	±.12
35 AND UP	±.15

TO ORDER BURNDY® PRODUCTS CALL

UNITED STATES:
1-800-346-4175 (LONDONDERRY, NH)

CANADA:
1-800-361-6975 (QUEBEC)
1-800-387-6487 (ALL OTHER PROVINCES)

FOR PRODUCT INFO: http://www.burndy.com

UNIVERSAL TERMINAL

ITEM NO:	N/A	
CAT. NO:	K4A-U (SEE TABLE)	
DRAWN BY:	P. LAPONIUS	04/10/97
CHECKER:	J. MICHAUD	04/21/97
DSN APPVL:	K. MELLO	04/30/97
MFG APPVL:	--	--
QA APPVL:	D. VARIO	05/02/97
MKT APPVL:	P. WERTHMAN	05/01/97
PROD FAM:	CM&R_Mechanical	
PROJECT #:	--	
DOCUMENT TYPE:	Sales	
REL LEVEL:	Released	

HUBBELL® BURNDY®

SCALE: 1:1

SIZE	DRAWING NO	REV
D	SE210997	T
	SHEET 4 OF 5	

REV: CREQ 08/10/21

DRAWING NO. SE210997

REV	DATE	DESCRIPTION	ECO	BY	C'H'K.
T	2023-09-19 04:00:00 EDT	UPDATED AS PER MARKUPS ...	230824032880	RA	YR

CATALOG NUMBER ◁5	FIG. NO.	CONDUCTOR RANGE AL or CU (AWG/KCMIL)	BOLT HOLE SIZE	DIMENSIONS C MAX.	D	E	H MAX.	K DIA.	L	N	T	RECOMMENDED TIGHTENING TORQUE: IN.LBS N.M ◁6
K11A30U ◁7	1	TWO: #6 - 300 KCMIL Class B & C #6 - 250 KCMIL Class G, H, I, K, & DLO	5/16" [M8]	1.02 [26]	.94 [24]	----	2.03 [52]	.33 [8]	3.00 [76]	.47 [12]	.50 [13]	275 (31)
K11A30GI ◁7	6	TWO: 6 STR. - 300 kcmil	1/4" [M6]	1.02 [26]	.94 [24]	----	2.03 [52]	.28 [7]	3.00 [76]	.47 [12]	.50 [13]	275 (31)
K11A34U2	2	TWO: 4/0 STR. - 500 kcmil	1/4" [M6]	1.45 [37]	1.66 [42]	.69 [18]	2.40 [61]	.28 [7]	2.91 [74]	.25 [6]	.75 [19]	375 (42)
K11A36U2	3	TWO: #2 - 600 KCMIL Class B & C #2 - 500 KCMIL Class G, H, I, K, & DLO	3/8" [M10]	1.52 [39]	2.31 [59]	1.38 [35]	3.02 [77]	.41 [10]	4.91 [125]	.38 [10]	.75 [19]	375 (42)
K11A39U2	3	TWO: #1/0 - 750 KCMIL Class B & C 1/0 - 600 KCMIL Class G, H, I, K, & DLO	3/8" [M10]	1.52 [39]	2.31 [59]	1.38 [35]	3.02 [77]	.41 [10]	4.91 [125]	.38 [10]	.75 [19]	375 (42)
K21A36U2	4	THREE: #2 - 600 KCMIL Class B & C #2 - 500 KCMIL Class G, H, I, K, & DLO	3/8" [M10]	2.49 [63]	2.31 [59]	1.38 [35]	3.03 [77]	.41 [10]	4.91 [125]	.38 [10]	.75 [19]	375 (42)
K22A36U2	5	FOUR: #2 - 600 KCMIL Class B & C #2 - 500 KCMIL Class G, H, I, K, & DLO	3/8" [M10]	2.49 [63]	2.31 [59]	1.38 [35]	3.03 [77]	.41 [10]	4.91 [125]	.38 [10]	.75 [19]	375 (42)
K22A39U2	5	FOUR: #1/0 - 750 KCMIL Class B & C 1/0 - 600 KCMIL Class G, H, I, K, & DLO	3/8" [M10]	2.86 [73]	2.31 [59]	1.38 [35]	3.02 [77]	.41 [10]	4.91 [125]	.38 [10]	.75 [19]	375 (42)

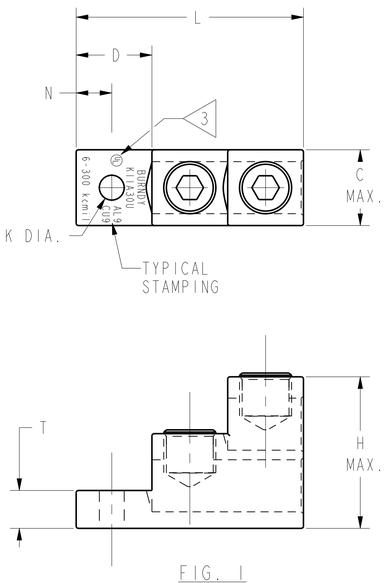

FIG. 1

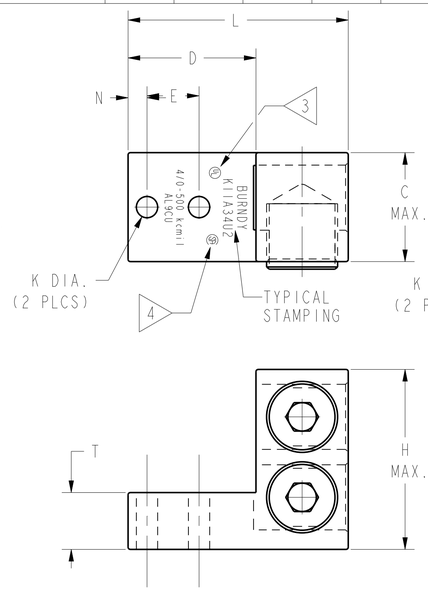

FIG. 2

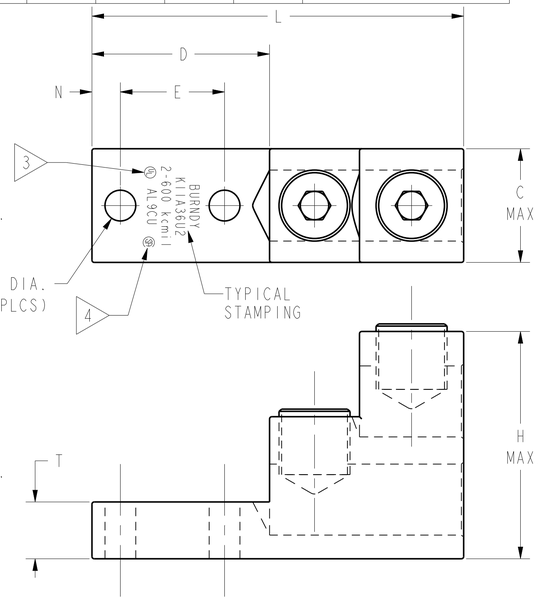

FIG. 3

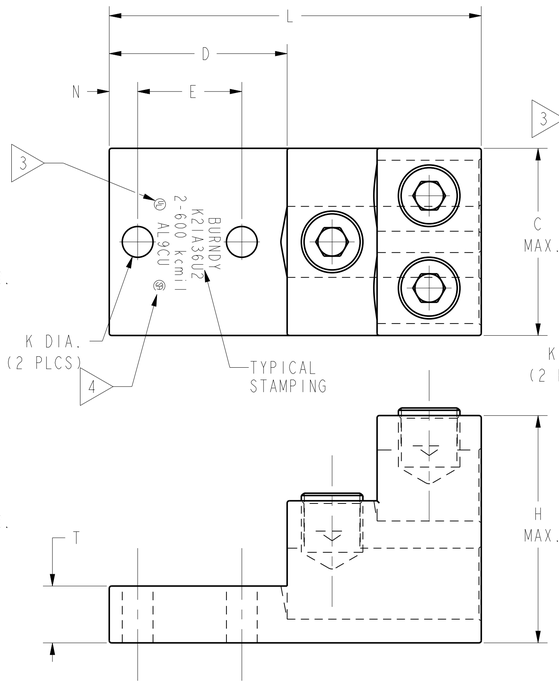

FIG. 4

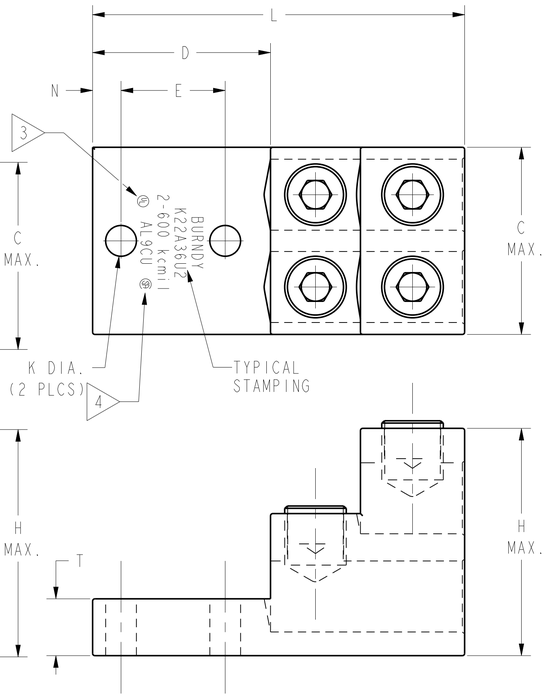

FIG. 5

NOTES:

1. MATERIAL-BODY: ALUMINUM
   SCREW: ALUMINUM

2. FINISH-BODY: TIN PLATED
   SCREW: TIN PLATED

3. CONNECTORS ARE UL LISTED TO UL486A- 486B FOR ALUMINUM AND COPPER CONDUCTORS AT 90°C. STAMP MAY READ CU9AL OR AL9CU TO INDICATE THIS LISTING.

4. CONNECTORS ARE CSA CERTIFIED TO C22.2, NO. 65 FOR INDICATED CONDUCTOR RANGE.

5. "N" INDICATES NEMA STANDARD STUD HOLES.

6. LISTED TORQUE VALUES ARE FOR MAXIMUM CONDUCTOR SIZES ACCOMMODATED. CONSULT UL486 TABLES 7-4, 7-5, & 7-6 FOR SMALLER CONDUCTOR SIZES.

7. THE K11A30U AND K11A30GI UNIVERSAL TERMINAL ARE NOT CSA LISTED.

8. DIMENSIONS IN BRACKETS [ ] ARE IN MILLIMETERS ROUNDED OFF TO THE NEAREST MILLIMETER, UNLESS OTHERWISE NOTED, AND ARE FOR REFERENCE ONLY.

9. NOT RECOMMENDED FOR USE IN HIGHLY CORROSIVE ENVIRONMENT.

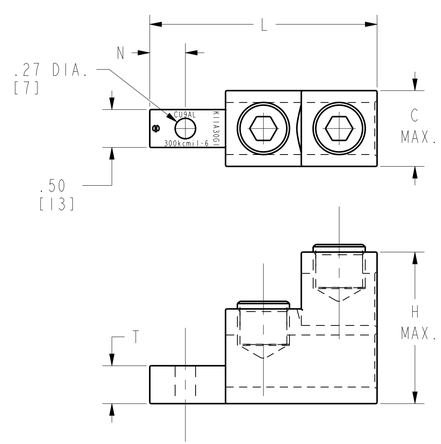

FIG. 6

CONNECTOR SIZE	TOLERANCES L
8C - 25	±.09
26 - 34	±.12
35 AND UP	±.15

TO ORDER BURNDY® PRODUCTS CALL

UNITED STATES:
1-800-346-4175 (LONDONDERRY, NH)

CANADA:
1-800-361-6975 (QUEBEC)
1-800-387-6487 (ALL OTHER PROVINCES)

FOR PRODUCT INFO: http://www.burndy.com

UNIVERSAL TERMINAL

ITEM NO:	N/A	
CAT. NO:	K11A3-U-2 & K2-A3-U-2 (TABLE)	
DRAWN BY:	P. LAPONIUS	04/10/97
CHECKER:	J. MICHAUD	04/21/97
DSN APPVL:	K. MELLO	04/30/97
MFG APPVL:	--	--
QA APPVL:	D. VARIO	05/01/97
MKT APPVL:	P. WERTHMAN	05/01/97
PROD FAM:	CM&R_Mechanical	
PROJECT #:	--	
DOCUMENT TYPE:	Sales	
REL LEVEL:	Released	

SIZE: D

DRAWING NO: SE210997

SHEET 5 OF 5

REV: T

SCALE: 1:1

REV: CREO_08/10/21